HYUNDAI HEAVY INDUSTRIES CO., LTD.

본 도면은 현대중공업(주) 재산이므로 허가없이 복사할 수 없음 (취급유의)

THIS DRAWING IS PROPRIETARY TO HHI. NO PART OF THIS DRAWING MAYBE REPRODUCED WITHOUT THE PERMISSION OF HHI.

HYUNDAI HEAVY INDUSTRIES CO., LTD.

TEFC

THREE PHASE INDUCTION MOTOR

TYPE: (1) TNB , TDB

CAST IRON FRAME

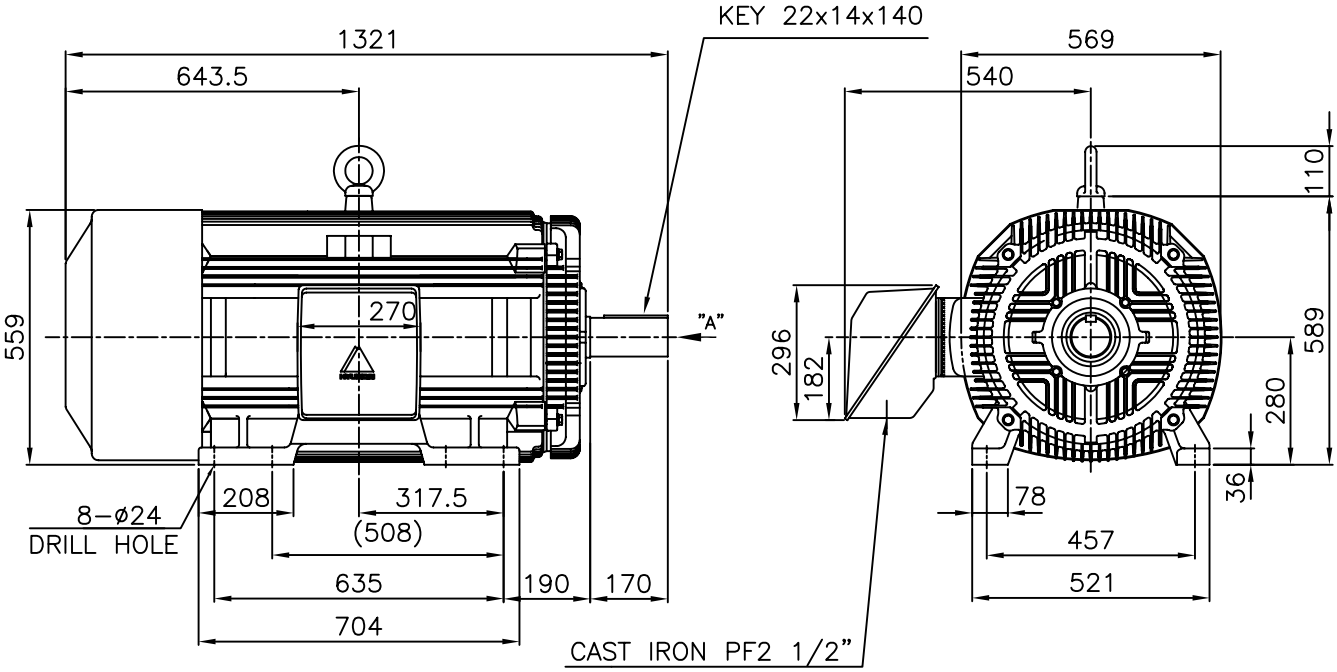

NOTE

1.TOLERANCE :

CENTER HEIGHT	$280^{0}_{-1.0}$
BASE HOLE	$ø24^{+0.43}_{0}$
SHAFT DIAMETER	$ø85^{+0.035}_{+0.013}$
KEYWAY WIDTH	$22^{-0.022}_{-0.074}$
KEYWAY DEPTH	$9^{+0.2}_{0}$
KEY WIDTH	$22^{0}_{-0.052}$
KEY HEIGHT	$14^{0}_{-0.110}$

2.The type (1)-"TNB , TDB" is for HHI's standard products and it can be changed for customer's requirements or detail designing.

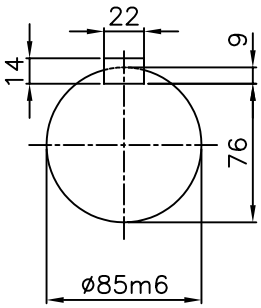

VIEW "A"

SCALE 4/1

APPD BY	KANG K.J.	UNIT	MM	SUBJECT	KS Fr.280LL TEFC	TEFC STANDARD
CHKD BY	KIM O.J.	SCALE	1/17			CAD PROJ \ FILE: MMSTDMTR/TJ8XAP51
CHKD BY	LEE N.D.	PROJEC'N	3rd Angle	TITLE	OUTLINE THREE-PHASE INDUCTION MOTOR	
DSND BY	KIM RYANG GYU	DATE	2007.03.23			
HYUNDAI HEAVY INDUSTRIES CO., LTD. INDUSTRIAL & POWER SYSTEMS				REF. NO	L2-Series	Sheet No. of
				DWG NO	TJ8XAP51	Revision No. 0