HYUNDAI HEAVY INDUSTRIES CO., LTD.	TEFC THREE PHASE INDUCTION MOTOR	TYPE	HK CAST IRON FRAME

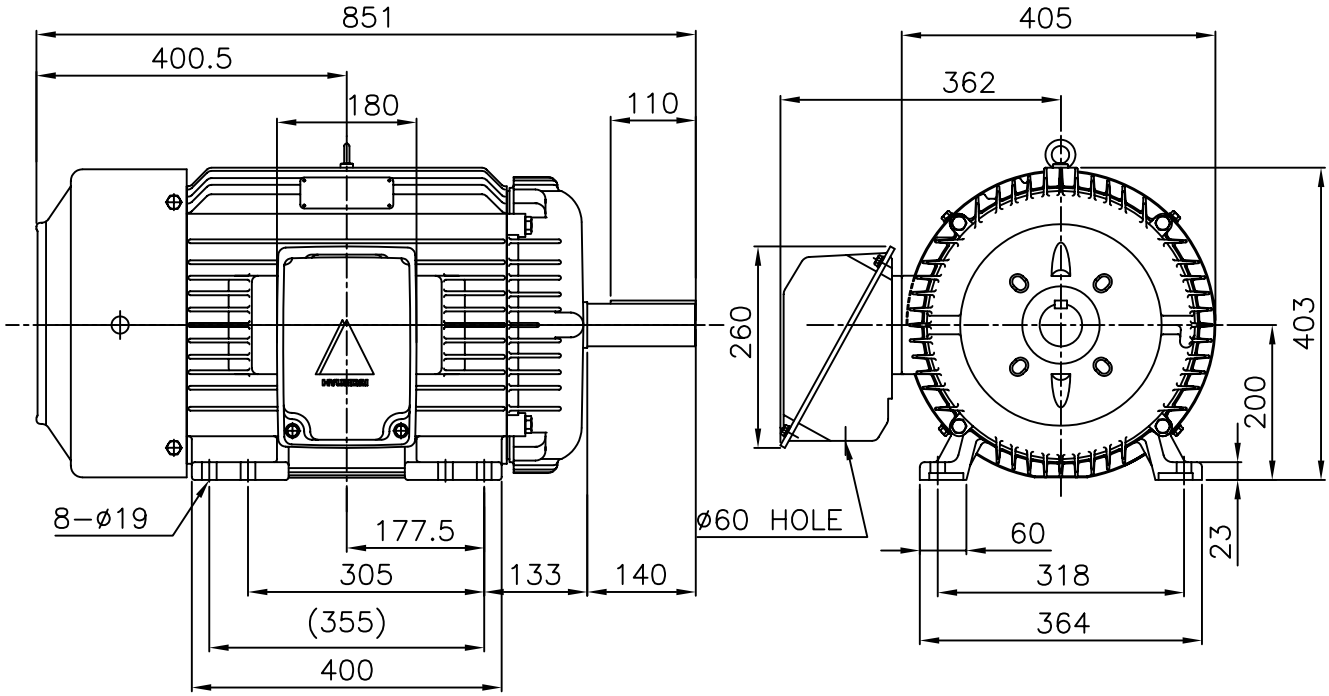

NOTE

1.TOLERANCE :

CENTER HEIGHT	$200^{+0}_{-0.5}$
BASE HOLES	$ø19^{+0.43}_{-0}$
SHAFT DIAMETER	$ø60^{+0.030}_{+0.011}$
KEYWAY WIDTH	$18^{+0}_{-0.043}$
KEYWAY DEPTH	$53^{+0}_{-0.2}$

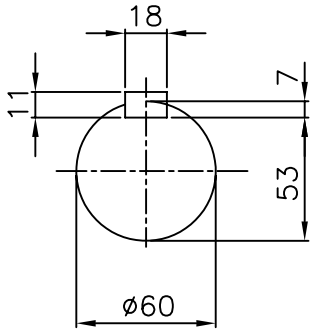

∗STEEL CONDUIT BOX

APPD BY	KIM.Y.S	UNIT	mm	SUBJECT	KS 200LL 4.6P	CAD PROJ \ FILE XSDNKS\B1940SB2
CHKD BY	---	SCALE	1/10	TITLE	OUTLINE	
CHKD BY	KO.S.H	PROJEC'N	3rd Angle			
DSND BY	LEE KWANG SOO	DATE	2001. 3. 7			
HYUNDAI HEAVY INDUSTRIES CO., LTD. Electro−Electric System Division				REF. NO	B1940SB2	Sheet No. of
				DWG NO	227B1940SB2	Revision No. 0

32N